LAMP® HG-JH DAMPER HINGE INSTALLTION MANUAL

Lapcon

Thank you for selecting our product. Before starting installation, please read this manual thoroughly to ensure correct installation. Please keep this manual at hand for future reference.

APPLICABLE LID AND DOOR

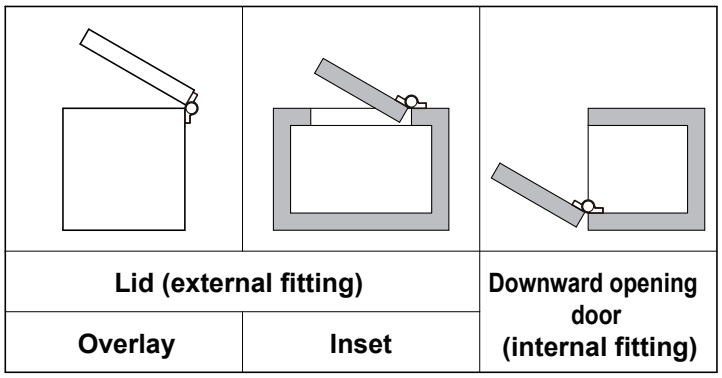

APPLICATION EXAMPLES

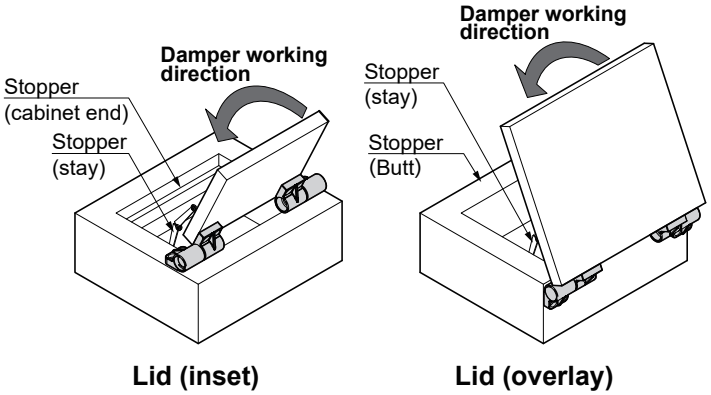

DIMENSIONS

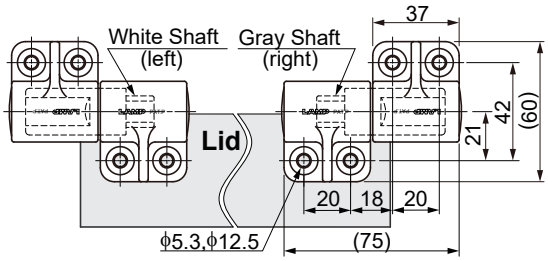

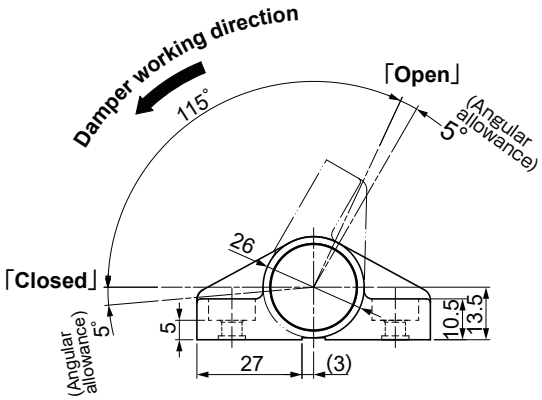

FOR YOUR SAFE WORK AND CORRECT INSTALLATION

Meaning of symbols

⚠ Warning Caution	⃠ Prohibited	❗ Required

⚠ Caution If not followed, injury or damage may result.

- ❗ This product should be mounted on a surface which has enough strength to hold the moment of the lid. If not, the lid may fall and cause injury.
- ⃠ Do not use this product for applications outside of its specification.
- ❗ Use stays and stoppers with the dampers to prevent over rotation. If not the damper may be damaged.
- ❗ Align the axis of both hinges. If not, malfunction or damage will result.
- ❗ When mounting the hinges to an inclined surface, contact us.
- ⃠ Do not use excessive force as this may result in damage.
- ⚠ If the lid is released at a low angle, the damper may not work properly.
- ⚠ If the operating temperature increases, the door movement becomes quicker. If the temperature decreases, movement becomes slower. This is not a mechanical problem.
- ⚠ The cap will loosen after several times of detachment.

COMPONENT PARTS

①Cabinet bracket	②Lid bracket (left) ※1	③Lid bracket (right) ※1 (with damper)	④Cap
2pcs	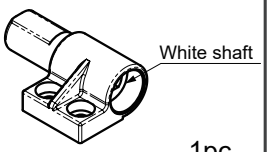 1pc	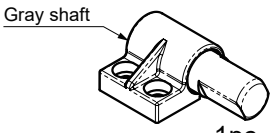 1pc	4pcs

※ Left hand or right hand are defined by the front view of the lid.

●Screws (not provided): Hexagon socket head bolt 8 pcs, Plain washer (5 mm) 8 pcs

SPECIFICATIONS

Item name	Damper ※2			Torque ※3 N·m (kg・cm)
	Color of shaft		Color of marking	
HG-JH25	White (for left)	Gray (for right)	Blue	3～5 (30.6～51)
HG-JH35			Red	5～7 (51～71.4)

※2 … Left: Damper works when the shaft is turned anti-clockwise.
Right: Damper works when the shaft is turned clockwise.

※3 … The figure shows the torque of two hinges per lid.

Ambient temperature: 0˚C～40˚C

Ambient humidity: Max. 90%

MAXIMUM LID TORQUE CALCLATION

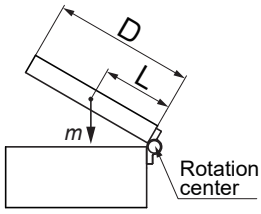

T = m×9.8×L

T:Maxim um lid torque (N·m)

m:Lid weight (kg)

D:Lid length(m)

A:Length of lid back from rotation center(m)

L:Distance from rotation center to lid center of gravity/(m)

L = D/2 - A

INSTALLATION

A. Assembly of brackets in alternative directions (Application example: lid (overlay)

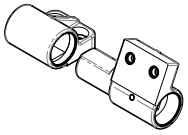

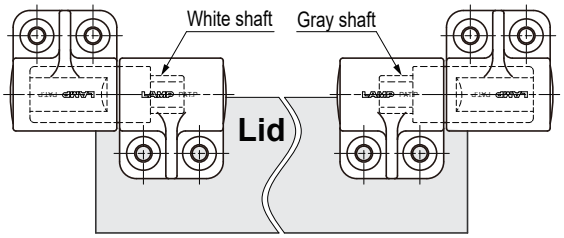

【1】Mount the lid bracket ② As shown in the left figure.

【2】Assemble the cabinet bracket to the damper. (See left figure A or B.)

【3】Fix the cabinet bracket to the cabinet together with the lid.

【4】Verify that the lid movement is OK.

【5】Put the four caps ④ onto the brackets.

B. Assembly of brackets in the same direction (Application example: lid (inset)

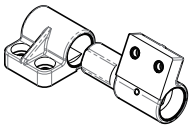

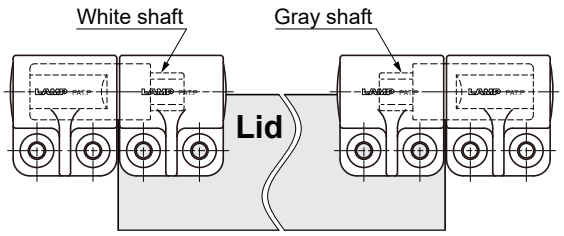

SUGATSUNE KOGYO CO.,LTD
Tokyo, JAPAN
Phone: +81 (0)3 3866 2260 E-mail:export@sugatsune.co.jp

SUGATSUNE KOGYO (UK) LTD
Reading, UK
Phone: +44 118 9272 955 E-mail:sales@sugatsune.co.uk

SUGATSUNE EUROPE GmbH
Düsseldorf, GERMANY
Phone: +49 211 53812900 E-mail:sales@sugatsune.eu

SUGATSUNE SHANGHAI Co., LTD
Shanghai, CHINA
Phone: +86 21 3632 1858 E-mail:lamp@sugatsune.com.cn

Guangzhou, CHINA
Phone: +86 20 6639 3552 E-mail:lamp@sugatsune.com.cn

SUGATSUNE KOGYO INDIA PRIVATE LIMITED
Mumbai, INDIA
Phone: +91 22 28314490/91 E-mail:sales@sugatsune.in

SUGATSUNE AMERICA, INC
California, USA
Phone: +1 310 329 6373 E-mail:sales@sugatsune.com

Illinois, USA
Phone: +1 630 317 7072 E-mail:sales@sugatsune.com

SUGATSUNE CANADA, INC.
Phone: +1 514 312 5267 E-mail:support@sugatsune.ca

ISO9001(Japan Offices and Sugatsune America) and ISO14001(Chiba Production division and Logistics center), certified.

2022.04 1254-3